COPYRIGHT © 2019 | DEEPROOT GREEN INFRASTRUCTURE (ALL RIGHTS RESERVED)

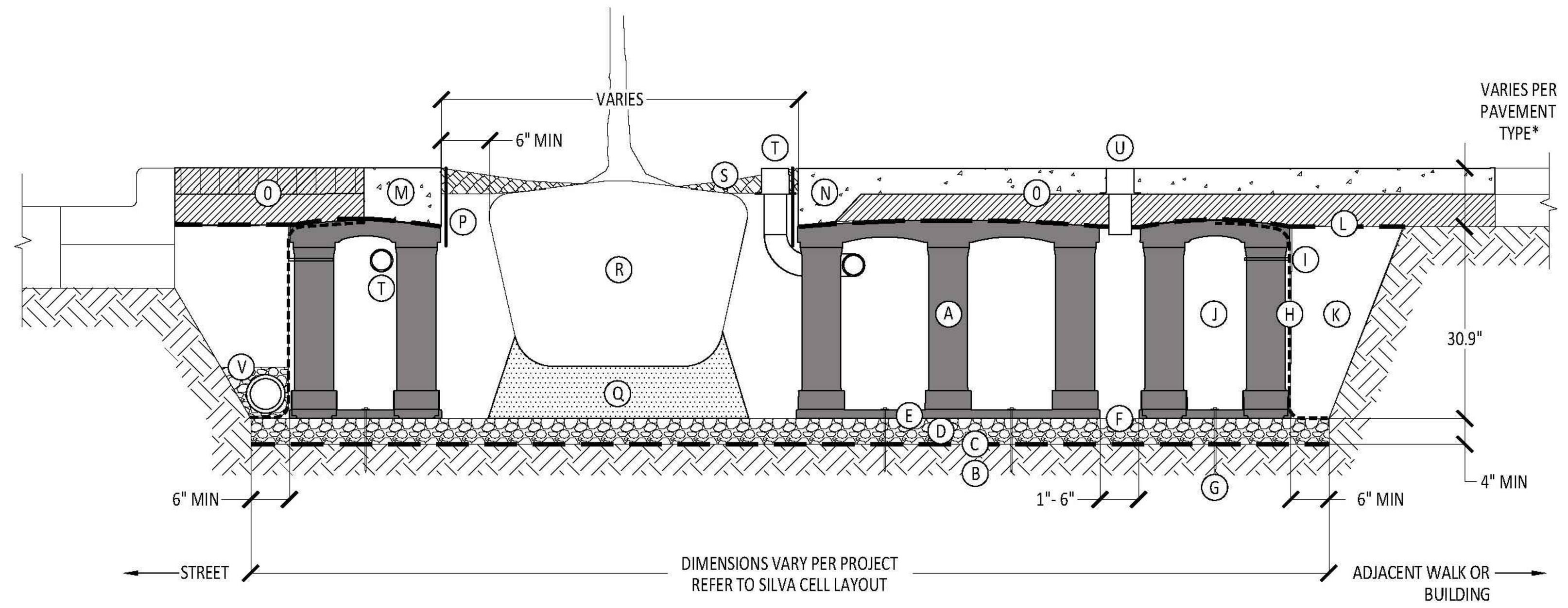

SILVA CELL SYSTEM 2X

NOT TO SCALE

KEY PLAN

- (A) SILVA CELL SYSTEM (DECK, BASE, AND POSTS)
- (B) SUBGRADE, COMPACTED
- (C) GEOTEXTILE FABRIC, PLACED ABOVE SUBGRADE
- (D) 4" MIN AGGREGATE SUB BASE, COMPACTED TO 95% PROCTOR
- (E) SILVA CELL BASE SLOPE, 10% MAX
- (F) 1" TO 6" SPACING BETWEEN SILVA CELLS AT BASE
- (G) ANCHORING SPIKES, CONTACT DEEPROOT FOR ALTERNATIVE
- (H) GEOGRID, WRAPPED AROUND PERIMETER OF SYSTEM, WITH 6" TOE (OUTWARD FROM BASE) AND 12" EXCESS (OVER TOP OF DECK)
- (I) CABLE TIE, ATTACHING GEOGRID TO SILVA CELL AT BASE OF UPPER LEG FLARE, AS NEEDED
- (J) PLANTING SOIL, PER PROJECT SPECIFICATIONS, PLACED IN LIFTS AND WALK-IN COMPACTED TO 75-85% PROCTOR
- (K) COMPACTED BACKFILL, PER PROJECT SPECIFICATIONS
- (L) GEOTEXTILE FABRIC TO EDGE OF EXCAVATION
- (M) RIBBON CURB AT TREE OPENING (TO BE USED WITH PAVERS OR ASPHALT)
- (N) THICKENED EDGE AT TREE OPENING (TO BE USED WITH CONCRETE)
- (O) PAVEMENT AND AGGREGATE BASE PER PROJECT *

*MINIMUM PAVEMENT PROFILE OPTIONS TO MEET H-20 LOADING

PAVEMENT	+ AGGREGATE BASE COURSE
4" CONCRETE	+ 4" AGGREGATE
3" PAVER	+ 12" AGGREGATE
4" ASPHALT	+ 12" AGGREGATE
2.6" PAVER	+ 5" CONCRETE

- (P) DEEPROOT ROOT BARRIER, 12" OR 18", DEPTH DETERMINED BY THICKNESS OF PAVEMENT SECTION, INSTALL DIRECTLY ADJACENT TO CONCRETE EDGE RESTRAINT
- (Q) PLANTING SOIL BELOW ROOT BALL, COMPACTED WELL TO PREVENT SETTLING
- (R) ROOT BALL
- (S) TREE OPENING TREATMENT, PER PROJECT SPECIFICATIONS
- (T) DEEPROOT WATER AND AIR VENT, ROOTBALL, WHEN REQUIRED
- (U) DEEPROOT WATER AND AIR VENT, WHEN REQUIRED
- (V) UNDERDRAIN SYSTEM, WHEN REQUIRED (LOCATION AND DETAILS BY OTHERS)

NOTES

1. EXCAVATION SHALL BE DONE IN ACCORDANCE WITH ALL APPLICABLE HEALTH AND SAFETY REGULATIONS
2. INSTALLATION TO BE COMPLETED IN ACCORDANCE WITH MANUFACTURER'S SPECIFICATIONS
3. PROVIDE SUPPLEMENTAL IRRIGATION
4. DO NOT SCALE DRAWINGS

deeproot
DeepRoot Green Infrastructure
www.deeproot.com
T 415 781 9700
F 415 781 0191

SILVA CELL SYSTEM 2X

NOT TO SCALE
INCHES

pompano beach
Florida's Warmest Welcome

Required Tree to Soil Volume Ratio Graph

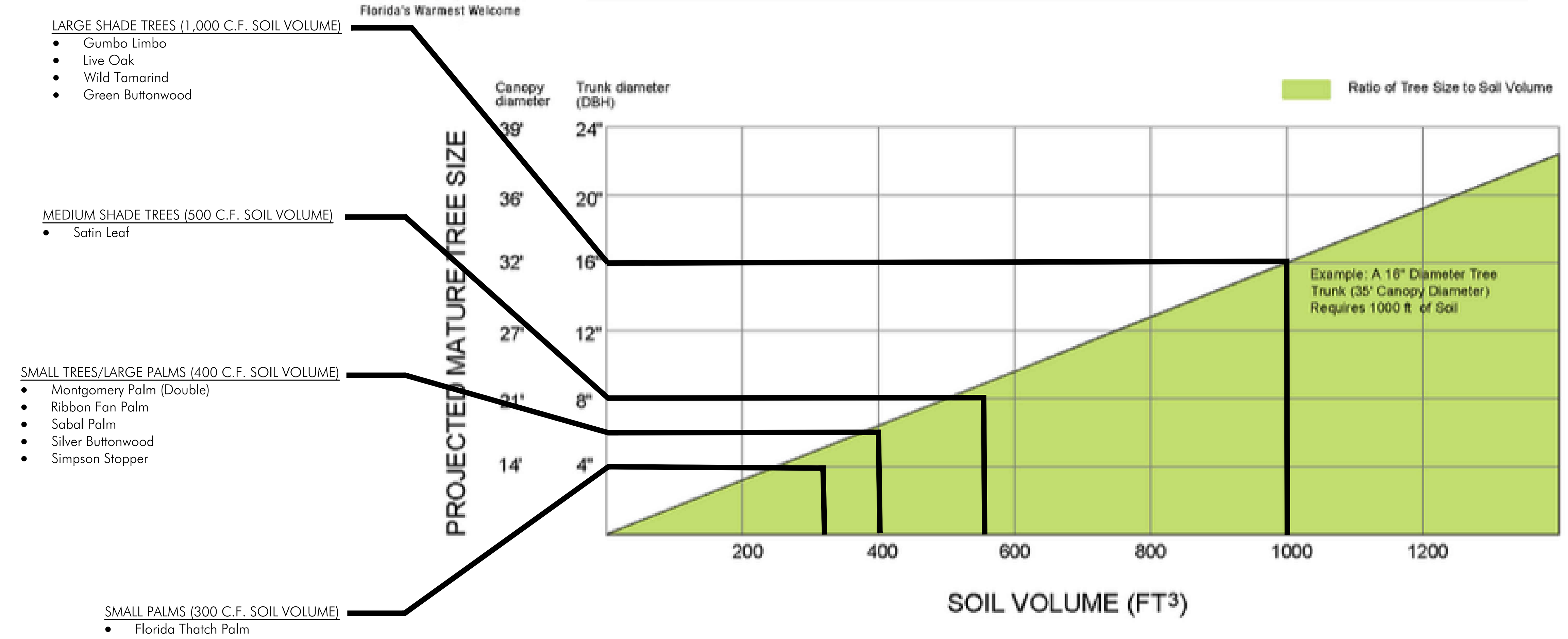

Soil volumes depicted in this chart are based on the amount of roots loam soil can support with optimum compaction for root growth.

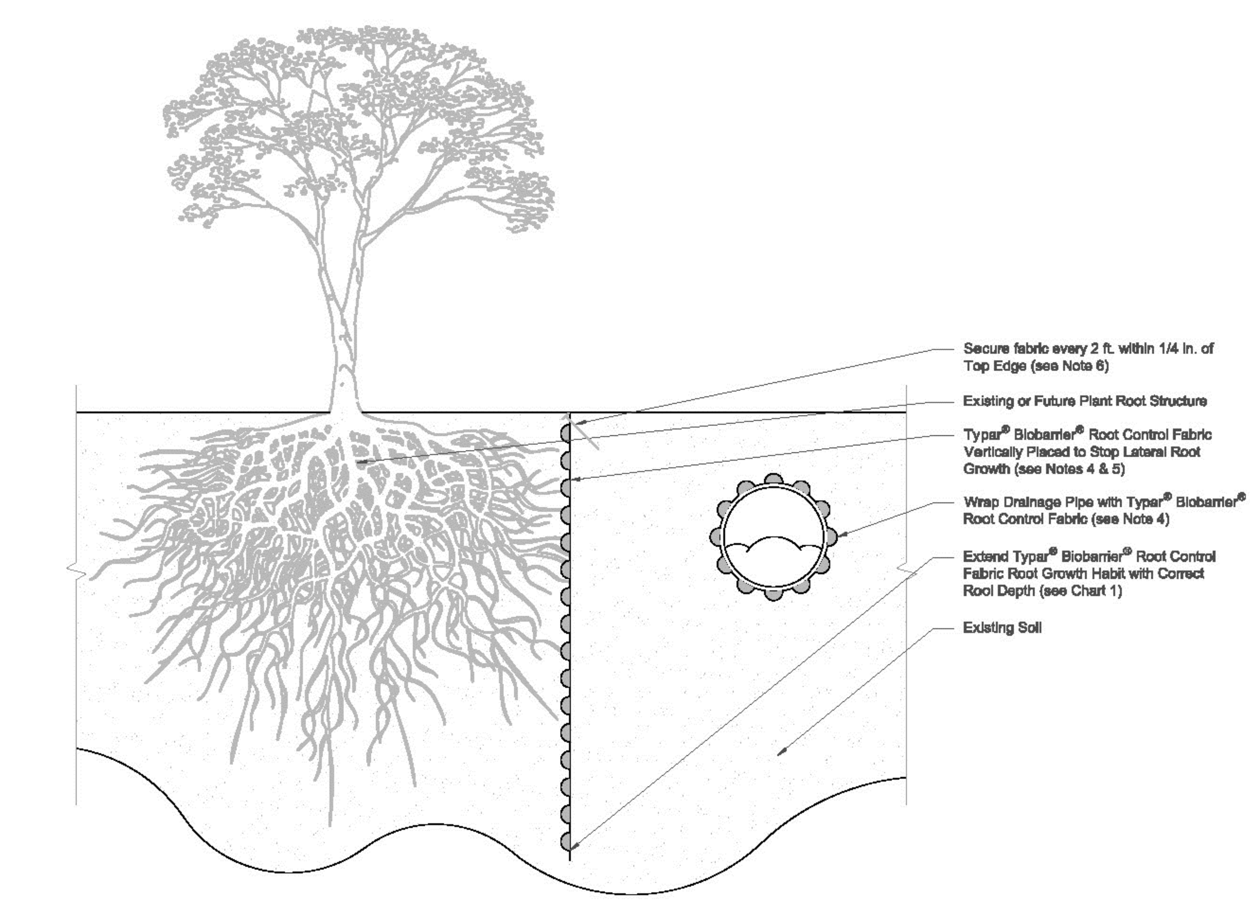

(1) Biobarrier® : Drain Line Application
Scale : N.T.S.

NOTES:

Note 1: Contact your utility company prior to trenching. Consult a professional arborist if root trimming is required.
Note 2: Install & Cover Biobarrier® as soon as possible (within 12 hours) after opening. High temperatures and direct sunlight can reduce effective product life.
Note 3: Dig trenches a minimum of 4 in. wide for Typar® Biobarrier® Root Control Fabric. Trenches must be a minimum length of mature plant canopy plus(+) 10 ft., centered on the root source and adjacent to protection area.
Note 4: Install Typar® Biobarrier® Root Control Fabric on the side of the trench opposite the root source.
Note 5: Install Typar® Biobarrier® Root Control Fabric with Nodules facing toward root source.
Note 6: Fixing pins should penetrate fabric between the nodules 1/4 in. from top edge of fabric and at a 45° angle to the trench wall.

Specific advice on the use of Biobarrier® can be obtained from Polymer Group Inc.

Table 1 : Biobarrier® Specifications

Description	Data	
Product Chemical Family	Biobarrier® Root Control System Thermoplastic Polyolefin	
Composition	Polypropylene	> 74.8%
	UV Stabilizer	< 5%
	Trifluralin	< 20%
	Pigment Masterbatch[1]	< 0.5%
Appearance Physical State Vapor Pressure[2] Boiling Point Solubility (H_2O)[2] Vapor Density Packing Density Odor pH Evaporation Rate Melting Point[2] Specific Gravity Percent Volatiles UV resistance Corrosivity Flamability Toxicity Hygroscopicity Explosivity	Gray Fabric Solid 13.7 mPa @ 25°C Not Applicable 0.2 ppm @ 25°C Not Applicable Not Applicable Aromatic (Solvent) Not Applicable Not Applicable > 48.5°C 0.88-0.99 Nil High None Non-Flammable IV None None	
Fabric		
Unit Weight Tensile Strength (lbs.) Elongation at Break (%) Mullen Burst Strength (psi) Puncture Strength (lbs.) Coefficient of Permeability (cm/sec.)	4.0 45.0 > 70.0 175.0 50.0 3×10^{2}	
Nodule		
Base Diameter (in.) Height Weight (oz.) Spacing (in.)	7/16 1/4 0.013 1-1/2	

[1]Contains Carbon Black : < 0.1%
[2]Trifluralin (CAS # 1582-09-8)
*Additional Information May Be Obtained From Polymer Group Inc. Upon Request

Chart 1: Examples of Intended Biobarrier® Root Control Applications & Roll Widths

Application	Root Control Width in. (cm) 12 (30)	19.5 (50)	24 (61)	29 (74)	39 (99)	58.5 (149)
Building Foundations					X	X
Burial Vaults/Tombstones						X
Containers			X	X	X	X
Curbs		X	X			
Drain Lines	X	X	X	X	X	X
Earthdams						X
Golf Greens/Tees/Cart Paths		X	X	X	X	
Landfills						X
Medians			X	X	X	
Paths	X	X	X	X		
Planting Beds		X	X	X	X	X
Pot 'N' Pot	SOLD IN 6" X 12" SWATCHES (500/BOX)					
Pots	X	X				
Retaining Walls				X	X	X
Roads		X	X	X		
Roof Gardens					X	X
Septic Tanks/Fields						X
Sidewalks		X	X	X		
Swimming Pools		X	X	X	X	
Tennis Courts		X	X	X	X	
Underground Pipes/Cables	X	X	X	X	X	X
Underground Storage Tanks						X
Utility Substations		X	X	X	X	
Biobarrier® Root Control is available in 20 ft. (6.1 m) or 100 ft. (30.5m) Roll Lengths						

Chart 1 is a general guide only. Your specific applications may require slightly different sizes. As a general rule, the greater the fabric width, the greater the degree of protection against costly root damage. But, like any other root barrier the protection does not extend beyond the edge of the fabric. So it's important to use adequate length and width to assure proper protection.

This field guide is provided as an aid to assessing root control in commonly encountered site conditions. Polymer Group Inc. accepts no responsibility for any loss or damage resulting from the use of this guide.

Please note that the information above is given as a guide only. All sizes and weights are nominal figures and may vary to what is published. Polymer Group Inc. cannot be liable for damage caused by incorrect installation of this product. Final determination of the suitability of any information or material for the use contemplated and the manner of its use is the sole responsibility of the user and the user must assume all risk and responsibility in connection therewith.

TYPAR Geosynthetics
70 Old Hickory Blvd. Old Hickory, TN 37138
Toll-Free: 1-800-541-5519
e-mail: geosales@fiberweb.com
website: www.typargeosynthetics.com

NOT FOR CONSTRUCTION

Copyright © Polymer Group Inc. All rights reserved
Typar® is a registered trademark of Polymer Group Inc.

DISCLAIMER:
THE INFORMATION CONTAINED IN THIS DETAIL IS PROVIDED FOR THE CONVENIENCE OF THE USER AND DOES NOT TAKE PLACE OF CONSTRUCTION PLANS AND/OR SPECIFICATIONS. POLYMER GROUP, INC. CANNOT BE HELD RESPONSIBLE FOR THE USE OR MISUSE OF THIS INFORMATION. WE RECOMMEND YOU CONTACT US FOR FURTHER DESIGN ASSISTANCE.
THIS DETAIL IS FOR CONCEPT PURPOSES ONLY AND DOES NOT IMPLY ANY ACTUAL DESIGN OR ENGINEERING HAS BEEN COMPLETED. ENGINEERING MODELING WILL NEED TO BE PERFORMED TO DETERMINE PROPER HYDROLOGICAL AND STRUCTURAL REQUIREMENTS AND COMPONENTS INCLUDING SAND AND AGGREGATE. ALL MATERIALS ARE SUBJECT TO APPROVAL BY POLYMER GROUP, INC.

Biobarrier® Root Control Fabric
For Drain Line Applications
Specification, Design & Installation Guide

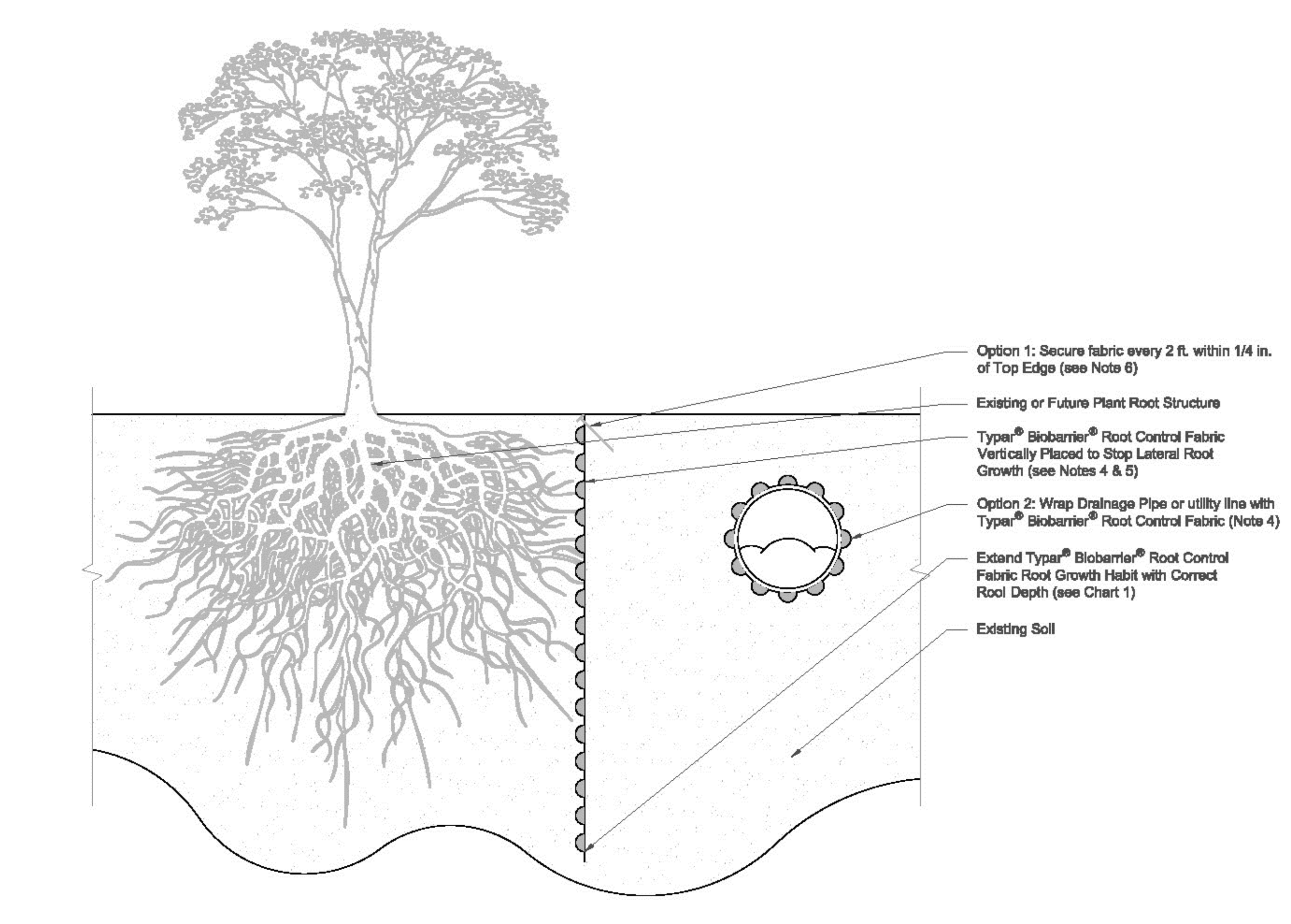

(1) Biobarrier® : Drain Line Application
Scale : N.T.S.

NOTES:

Note 1: Contact your utility company prior to trenching. Consult a professional arborist if root trimming is required.
Note 2: Install & Cover Biobarrier® as soon as possible (within 12 hours) after opening. High temperatures and direct sunlight can reduce effective product life.
Note 3: Dig trenches a minimum of 4 in. wide for Typar® Biobarrier® Root Control Fabric. Trenches must be a minimum length of mature plant canopy plus(+) 10 ft., centered on the root source and adjacent to protection area.
Note 4: Install Typar® Biobarrier® Root Control Fabric on the side of the trench opposite the root source.
Note 5: Install Typar® Biobarrier® Root Control Fabric with Nodules facing toward root source.
Note 6: Fixing pins should penetrate fabric between the nodules 1/4 in. from top edge of fabric and at a 45° angle to the trench wall.

Specific advice on the use of Biobarrier® can be obtained from Polymer Group Inc.

Table 1 : Biobarrier® Specifications

Description	Data	
Product Chemical Family	Biobarrier® Root Control System Thermoplastic Polyolefin	
Composition	Polypropylene	> 74.8%
	UV Stabilizer	< 5%
	Trifluralin	< 20%
	Pigment Masterbatch[1]	< 0.5%
Appearance Physical State Vapor Pressure[2] Boiling Point Solubility (H_2O)[2] Vapor Density Packing Density Odor pH Evaporation Rate Melting Point[2] Specific Gravity Percent Volatiles UV resistance Corrosivity Flamability Toxicity Hygroscopicity Explosivity	Gray Fabric Solid 13.7 mPa @ 25°C Not Applicable 0.2 ppm @ 25°C Not Applicable Not Applicable Aromatic (Solvent) Not Applicable Not Applicable > 48.5°C 0.88-0.99 Nil High None Non-Flammable IV None None	
Fabric		
Unit Weight Tensile Strength (lbs.) Elongation at Break (%) Mullen Burst Strength (psi) Puncture Strength (lbs.) Coefficient of Permeability (cm/sec.)	4.0 45.0 > 70.0 175.0 50.0 3×10^{2}	
Nodule		
Base Diameter (in.) Height Weight (oz.) Spacing (in.)	7/16 1/4 0.013 1-1/2	

[1]Contains Carbon Black : < 0.1%
[2]Trifluralin (CAS # 1582-09-8)
*Additional Information May Be Obtained From Polymer Group Inc. Upon Request

Chart 1: Examples of Intended Biobarrier® Root Control Applications & Roll Widths

Application	Root Control Width in. (cm) 12 (30)	19.5 (50)	24 (61)	29 (74)	39 (99)	58.5 (148)
Building Foundations					X	X
Burial Vaults/Tombstones						X
Containers			X	X	X	X
Curbs		X	X			
Drain Lines	X	X	X	X	X	X
Earthdams						X
Golf Greens/Tees/Cart Paths		X	X	X	X	
Landfills						X
Medians			X	X	X	
Paths	X	X	X	X		
Planting Beds		X	X	X	X	X
Pot 'N' Pot	SOLD IN 6" X 12" SWATCHES (500/BOX)					
Pots	X	X				
Retaining Walls				X	X	X
Roads		X	X	X		
Roof Gardens					X	X
Septic Tanks/Fields						X
Sidewalks		X	X	X		
Swimming Pools		X	X	X	X	
Tennis Courts		X	X	X	X	
Underground Pipes/Cables	X	X	X	X	X	X
Underground Storage Tanks						X
Utility Substations		X	X	X	X	
Biobarrier® Root Control is available in 20 ft. (6.1 m) or 100 ft. (30.5m) Roll Lengths						

Chart 1 is a general guide only. Your specific applications may require slightly different sizes. As a general rule, the greater the fabric width, the greater the degree of protection against costly root damage. But, like any other root barrier the protection does not extend beyond the edge of the fabric. So it's important to use adequate length and width to assure proper protection.

This field guide is provided as an aid to assessing root control in commonly encountered site conditions. Polymer Group Inc. accepts no responsibility for any loss or damage resulting from the use of this guide.

Please note that the information above is given as a guide only. All sizes and weights are nominal figures and may vary to what is published. Polymer Group Inc. cannot be liable for damage caused by incorrect installation of this product. Final determination of the suitability of any information or material for the use contemplated and the manner of its use is the sole responsibility of the user and the user must assume all risk and responsibility in connection therewith.

TYPAR Geosynthetics
70 Old Hickory Blvd. Old Hickory, TN 37138
Toll-Free: 1-800-541-5519
e-mail: geo.sales@pginw.com
website: www.typargeosynthetics.com

NOT FOR CONSTRUCTION

Copyright © Polymer Group Inc. All rights reserved
Typar® is a registered trademark of Polymer Group Inc.

DISCLAIMER:
THE INFORMATION CONTAINED IN THIS DETAIL IS PROVIDED FOR THE CONVENIENCE OF THE USER AND DOES NOT TAKE PLACE OF CONSTRUCTION PLANS AND/OR SPECIFICATIONS. POLYMER GROUP, INC. CANNOT BE HELD RESPONSIBLE FOR THE USE OR MISUSE OF THIS INFORMATION. WE RECOMMEND YOU CONTACT US FOR FURTHER DESIGN ASSISTANCE.
THIS DETAIL IS FOR CONCEPT PURPOSES ONLY AND DOES NOT IMPLY ANY ACTUAL DESIGN OR ENGINEERING HAS BEEN COMPLETED. ENGINEERING MODELING WILL NEED TO BE PERFORMED TO DETERMINE PROPER HYDROLOGICAL AND STRUCTURAL REQUIREMENTS AND COMPONENTS INCLUDING SAND AND AGGREGATE. ALL MATERIALS ARE SUBJECT TO APPROVAL BY POLYMER GROUP, INC.

Biobarrier® Root Control Fabric
For Utility & Pipe Applications
Specification, Design & Installation Guide

idea Architect
absolute-idea.com
CANAL PARK
3323 NE 163rd Street, Suite 200 North Miami Beach, FL 33160
(t) 305.792.0015 (f) 305.931.0279 (@) info@absolute-idea.com

SEAL

REGISTERED LANDSCAPE ARCHITECT KENNETH ERIC GARDNER LA 0001569 STATE OF FLORIDA

Printed copies of this document are not considered signed and sealed and the signature must be verified on any electronic copies

Digitally signed by Ken Gardner
Date: 2026.03.12 09:12:21 -04'00'

KEN GARDNER
FL LA 1569

TO THE BEST OF MY KNOWLEDGE, THE PLANS AND SPECIFICATIONS COMPLY WITH THE APPLICABLE MINIMUM BUILDING CODES AND THE APPLICABLE FIRE-SAFETY STANDARDS AS DETERMINED BY THE LOCAL AUTHORITY IN ACCORDANCE WITH THIS SECTION AND 633 FLORIDA STATUTES.

Professionals

idea Architect
CELEBRATING 30 YEARS FLYNN ENGINEERING
GSA DESIGN

REV.	DATE	DESCRIPTION
01	XX-XX-2024	D.R.C SUBMITAL

DRC
PZ24-12000027
04/15/2026

ALL MEASUREMENTS MUST BE VERIFIED BEFORE BEGINNING THE WORKS. NO MEASUREMENTS ARE TO BE SCALED DIRECTLY FROM THIS DRAWING.

Key section

Client
VERA FUND
NICK POLYUSHKIN
& YURI KHARITONENKOV
TEL: 305.833.3303

Project
1600 S FEDERAL HIGHWAY (MIXED-USE PROJECT)
1600 SOUTH FEDERAL HIGHWAY, POMPANO BEACH, FL 33062

Title
SOIL VOLUME DATA & DETAILS

Drawn	GSLA	Field	LANDSCAPE ARCH
Verified	KG	Scale	as shown
Approved	KG	Date	10-09-2024
Project Manager	KG	Dwg. no.	L-208b
Project	24-838		